POTENCIA Electromecánica S.A. de C.V.

DIMENSIONAL MOTORES LINEA H 4160 Vca

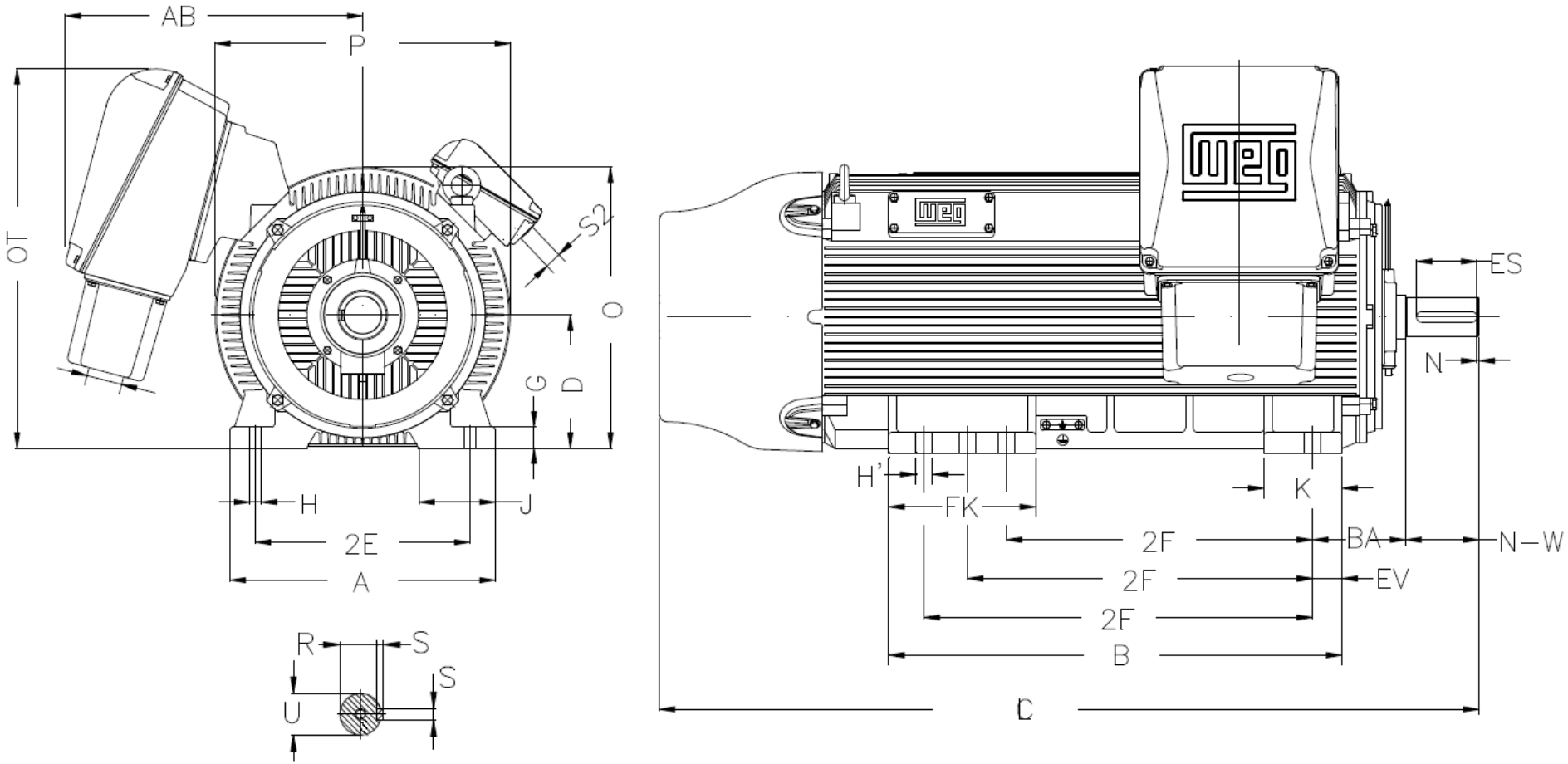

POTENCIA	RPM	ARMAZON	DIMENSIONES GENERALES (PULGADAS)																						
			2E	2F	H	BA	A	B	C	D	G	J	O	K	EV	P	T	DEPTH	S	R	ES	N-W	U	AB	FK
600 HP	3600	5810/11/12TS	23	36.00/40.00/45.00	1.181	10.0	29.528	51.181	80.931	14.5	2.492	9.055	29.854	7.874	3.150	30.709	8.071	0.625	0.625	2.021	4.330	4.750	2.375	39.189	
	1800	5810/11/12T	23	36.00/40.00/45.00	1.181	10.0	29.528	51.181	87.806	14.5	2.492	9.055	29.854	7.874	3.150	30.709	8.071	1.000	1.000	3.307	9.842	11.325	3.875	39.189	
	1200	5810/11/12T	23	36.00/40.00/45.00	1.181	10.0	29.528	51.181	87.806	14.5	2.492	9.055	29.854	7.874	3.150	30.709	8.071	1.000	1.000	3.307	9.842	11.325	3.875	39.189	
	900	6806/7/8T	27	28.00/32.00/36.00	1.417	11.5	33.071	42.126	89.858	17.0	3.220	8.583	34.520	8.661	3.150	35.039	7.480	1.000	1.000	3.817	9.842	11.625	4.375	39.764	
	720	7006/10T	30	32/36/40/45/50	1.417	12.5	37.402	57.087	110.641	17.5	2.165	9.961	37.185	9.134	3.543	39.370	8.858	1.250	1.250	4.423	9.842	11.625	5.125	49.803	
700 HP	3600	6806/7/8TS	27	28.000/32.000/36.00	1.417	11.5	33.071	42.126	83.982	17.0	3.220	8.583	34.520	8.661	3.150	35.039	7.480	0.625	0.625	2.401	4.330	5.750	2.750	39.764	
	1800	5810/11/12T	23	36.000/40.000/45.000	1.181	10.0	29.528	54.181	87.806	14.5	2.492	9.055	29.854	7.874	3.150	30.709	8.071	1.000	1.000	3.307	9.842	11.625	3.875	39.189	
	1200	6806/7/8T	27	28.000/32.000/36.000	1.417	11.5	33.071	42.126	89.858	17.0	3.220	8.583	34.520	8.661	3.150	35.039	7.480	1.000	1.000	3.817	9.842	11.625	4.375	39.764	
	900	6809/10/11T	27	40.000/45.000/50.000	1.417	11.5	33.071	56.102	101.670	17.0	3.220	8.583	34.520	8.661	3.150	35.039	7.480	1.000	1.000	3.817	9.842	11.625	4.375	39.764	
	720	7006/10T	30	32/36/40/45/50	1.417	12.5	37.402	57.087	110.641	17.5	2.165	9.961	37.185	9.134	3.543	39.370	8.850	1.250	1.250	4.423	9.842	11.625	5.125	49.803	26.063
750 HP	720	7006/10T	30	32/36/40/45/50	1.417	12.5	37.402	57.087	110.641	17.5	2.165	9.961	37.185	9.134	3.543	39.370	8.858	1.250	1.250	4.423	9.842	11.625	5.125	49.803	26.063
800 HP	3600	6806/8TS	27	28.000/32.000/36.000	1.417	11.5	33.071	42.126	83.982	17.0	3.220	8.583	34.520	8.661	3.150	35.039	7.480	0.625	0.625	2.401	4.330	5.750	2.750	39.764	
	1800	6806/7/8T	27	28.000/32.000/36.000	1.417	11.5	33.071	42.126	89.858	17.0	3.220	8.583	34.520	8.661	3.150	35.039	7.480	1.000	1.000	3.817	9.842	11.625	4.375	39.764	
	1200	6806/7/8T	27	28.000/32.000/36.00	1.417	11.5	33.071	42.126	89.858	17.0	3.220	8.583	34.520	8.661	3.150	35.039	7.480	1.000	1.000	3.817	9.842	11.625	4.375	39.764	
	900	6809/10/11T	27	40.000/45.000/50.000	1.417	11.5	33.071	56.102	101.670	17.0	3.220	8.583	34.520	8.661	3.150	35.039	7.480	1.000	1.000	3.817	9.842	11.625	4.375	39.764	
	720	7006/10T	30	32/36/40/45/50	1.417	12.5	37.402	57.087	110.641	17.5	2.165	9.961	37.185	9.134	3.543	39.370	8.858	1.250	1.250	4.423	9.842	11.625	5.125	49.803	26.063
850 HP	720	7006/10T	30	32/36/40/45/50	1.417	12.5	37.402	57.087	110.641	17.5	2.165	9.961	37.185	9.134	3.543	39.370	8.858	1.250	1.250	4.423	9.842	11.625	5.125	49.803	26.063
900 HP	3600	6806/8TS	27	28.000/32.000/36.000	1.417	11.5	33.071	42.126	83.982	17.0	3.220	8.583	34.520	8.661	3.150	35.039	7.480	0.625	0.625	2.401	4.330	5.750	2.750	39.764	
	1800	6806/7/8T	27	28.000/32.000/36.000	1.417	11.5	33.071	42.126	89.858	17.0	3.220	8.583	34.520	8.661	3.150	35.039	7.480	1.000	1.000	3.817	9.842	11.625	4.375	39.764	
	1200	6809/10/11T	27	40.000/45.000/50.000	1.417	11.5	33.071	56.102	101.670	17.0	3.220	8.583	34.520	8.661	3.150	35.039	7.480	1.000	1.000	3.817	9.842	11.625	4.375	39.764	
	900	6809/10/11T	27	40.000/45.000/50.000	1.417	11.5	33.071	56.102	101.670	17.0	3.220	8.583	34.520	8.661	3.150	35.039	7.480	1.000	1.000	3.817	9.842	11.625	4.375	39.764	
950 HP	900	7006/10T	30	32/36/40/45/50	1.417	12.5	37.402	57.087	110.641	17.5	2.165	9.961	37.185	9.134	3.543	39.370	8.858	1.250	1.250	4.423	9.842	11.625	5.125	49.803	26.063
1000 HP	3600	6809/10/11TS	27	40.000/45.000/50.000	1.417	11.5	33.071	56.102	95.793	17.0	3.220	8.583	34.520	8.661	3.150	35.039	7.480	0.625	0.625	2.401	4.330	5.750	2.750	39.764	
	1800	6809/10/11T	27	40.000/45.000/50.000	1.417	11.5	33.071	56.102	101.670	17.0	3.220	8.583	34.520	8.661	3.150	35.039	7.480	1.000	1.000	3.817	9.842	11.625	4.375	39.764	
	1200	6809/10/11T	27	40.000/45.000/50.000	1.417	11.5	33.071	56.102	101.670	17.0	3.220	8.583	34.520	8.661	3.150	35.039	7.480	1.000	1.000	3.817	9.842	11.625	4.375	39.764	
	900	7006/10T	30	32/36/40/45/50	1.417	12.5	37.402	57.087	110.641	17.5	2.165	9.961	37.185	9.134	3.543	39.370	8.858	1.250	1.250	4.423	9.842	11.625	5.125	49.803	26.063
1100 HP	3600	6809/10/11TS	27	40.000/45.000/50.000	1.417	11.5	33.071	56.102	95.793	17.0	3.220	8.583	34.520	8.661	3.150	35.039	7.480	0.625	0.625	2.401	4.330	5.750	2.750	39.764	
	1800	6809/10/11T	27	40.000/45.000/50.000	1.417	11.5	33.071	56.102	101.670	17.0	3.220	8.583	34.520	8.661	3.150	35.039	7.480	1.000	1.000	3.817	9.842	11.625	4.375	39.764	
	1200	7006/10T	30	32/36/40/45/50	1.417	12.5	37.402	57.087	110.641	17.5	2.165	9.961	37.185	9.134	3.543	39.370	8.858	1.250	1.250	4.423	9.842	11.625	5.125	49.803	26.063
	900	7006/10T	30	32/36/40/45/50	1.417	12.5	37.402	57.087	110.641	17.5	2.165	9.961	37.185	9.134	3.543	39.370	8.858	1.250	1.250	4.423	9.842	11.625	5.125	49.803	26.063
1250 HP	3600	6809/10/11TS	27	40.000/45.000/50.000	1.417	11.5	33.071	56.102	95.793	17.0	3.220	8.583	34.520	8.661	3.150	35.039	7.480	0.625	0.625	2.401	4.330	5.750	2.750	39.764	
	3600	7006/10T	30	32/36/40/45/50	1.417	12.5	37.402	57.087	110.641	17.5	2.165	9.961	37.185	9.134	3.543	39.370	8.858	1.250	1.250	4.423	9.842	11.625	5.125	49.803	26.063
	1800	6809/10/11T	27	40.000/45.000/50.000	1.417	11.5	33.071	56.102	101.670	17.0	3.220	8.583	34.520	8.661	3.150	35.039	7.480	1.000	1.000	3.817	9.842	11.625	4.375	39.764	
	1200	7006/10T	30	32/36/40/45/50	1.417	12.5	37.402	57.087	110.641	17.5	2.165	9.961	37.185	9.134	3.543	39.370	8.858	1.250	1.250	4.423	9.842	11.625	5.125	49.803	26.063
	900	7006/10T	30	32/36/40/45/50	1.417	12.5	37.402	57.087	110.641	17.5	2.165	9.961	37.185	9.134	3.543	39.370	8.858	1.250	1.250	4.423	9.842	11.625	5.125	49.803	26.063
1350 HP	3600	7006/10T	30	32/36/40/45/50	1.417	12.5	37.402	57.087	110.641	17.5	2.165	9.961	37.185	9.134	3.543	39.370	8.858	1.250	1.250	4.423	9.842	11.625	5.125	49.803	26.063
	1800	7006/10T	30	32/36/40/45/50	1.417	12.5	37.402	57.087	110.641	17.5	2.165	9.961	37.185	9.134	3.543	39.370	8.858	1.250	1.250	4.423	9.842	11.625	5.125	49.803	26.063
	900	7006/10T	30	32/36/40/45/50	1.417	12.5	37.402	57.087	110.641	17.5	2.165	9.961	37.185	9.134	3.543	39.370	8.858	1.250	1.250	4.423	9.842	11.625	5.125	49.803	26.063
1500 HP	3600	7006/10T	30	32/36/40/45/50	1.417	12.5	37.402	57.087	110.641	17.5	2.165	9.961	37.185	9.134	3.543	39.370	8.858	1.250	1.250	4.423	9.842	11.625	5.125	49.803	26.063
	1800	7006/10T	30	32/36/40/45/50	1.417	12.5	37.402	57.087	110.641	17.5	2.165	9.961	37.185	9.134	3.543	39.370	8.858	1.250	1.250	4.423	9.842	11.625	5.125	49.803	26.063
	1200	7006/10T	30	32/36/40/45/50	1.417	12.5	37.402	57.087	110.641	17.5	2.165	9.961	37.185	9.134	3.543	39.370	8.858	1.250	1.250	4.423	9.842	11.625	5.125	49.803	26.063
1700 HP	3600	7006/10T	30	32/36/40/45/50	1.417	12.5	37.402	57.087	110.641	17.5	2.165	9.961	37.185	9.134	3.543	39.370	8.858	1.250	1.250	4.423	9.842	11.625	5.125	49.803	26.063
	1800	7006/10T	30	32/36/40/45/50	1.417	12.5	37.402	57.087	110.641	17.5	2.165	9.961	37.185	9.134	3.543	39.370	8.858	1.250	1.250	4.423	9.842	11.625	5.125	49.803	26.063
1900 HP	1800	7006/10T	30	32/36/40/45/50	1.417	12.5	37.402	57.087	110.641	17.5	2.165	9.961	37.185	9.134	3.543	39.370	8.858	1.250	1.250	4.423	9.842	11.625	5.125	49.803	26.063